CP10S100S

10A Surface Mount Trench Schottky Rectifier

■ Features

- Low forward voltage drop.
- Excellent high temperature stability.
- Fast switching capability.
- Suffix "G" indicates Halogen-free part, ex.CP10S100SG.
- Lead-free parts meet environmental standards of MIL-STD-19500 /228

■ Outline

TO-277

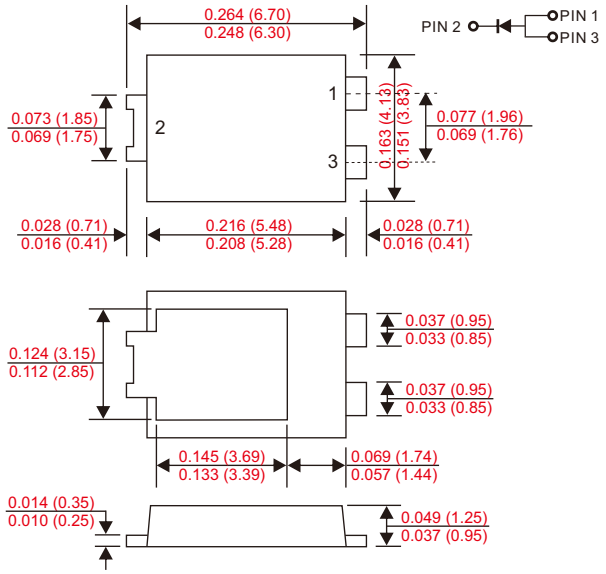

Dimensions in inches and (millimeters)

■ Mechanical data

- Epoxy : UL94-V0 rated flame retardant.
- Case : Molded plastic, TO-277.
- Lead : Solder plated, solderable per MIL-STD-750, Method 2026.
- Polarity: Indicated by cathode band.
- Mounting Position : Any.
- Weight : Approximated 0.093 grams.

■ Maximum ratings and electrical characteristics

Rating at 25°C ambient temperature unless otherwise specified. Single phase, half wave, 60Hz, resistive or inductive load. For capacitive load, derate current by 20%.

Parameter	Conditions	Symbol	CP10S100S	UNIT
Marking code			CP10S100S	
Peak repetitive reverse voltage Working peak reverse voltage DC blocking voltage		V_{RRM} V_{RWM} V_{RM}	100	V
Forward rectified current		I_O	10	A
Forward surge current	8.3ms single half sine-wave superimposed on rate load (JEDEC method)	I_{FSM}	200	A
Peak repetitive reverse surge current	2us - 1kHz	I_{RRM}	3	A
Thermal resistance(1)	Junction to ambient	$R_{\theta JA}$	73	°C/W
Operating and Storage temperature		T_J, T_{STG}	-65 ~ +175	°C

Parameter	Conditions	Symbol	MIN.	TYP.	MAX.	UNIT
Forward voltage drop	I_F = 10A, T_J = 25°C	V_F			700	mV
	I_F = 10A, T_J = 125°C			570	630	
	I_F = 20A, T_J = 25°C				820	
Reverse current	V_R = V_{RRM} T_J = 25°C	I_R			0.1	mA
	V_R = V_{RRM} T_J = 125°C				25	

Note : 1.FR-4 PCB, 2oz.Copper.

Document ID : DS-12KEI
Revised Date : 2014/07/21
Revision : C1

■ Rating and characteristic curves

Fig.1 - Forward Current Derating Curve

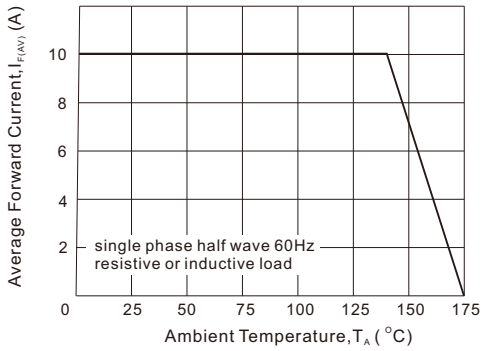

Fig. 2 - Instantaneous Forward Characteristics

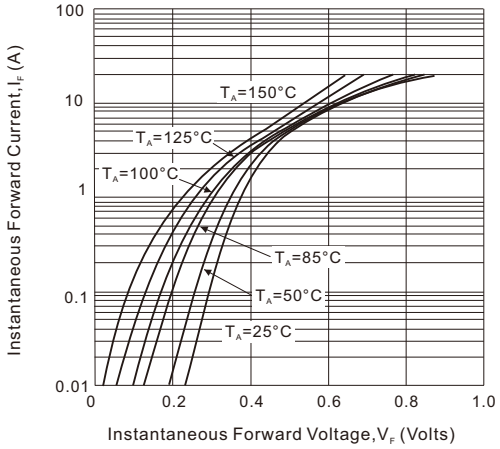

Fig. 3 - Reverse Characteristics

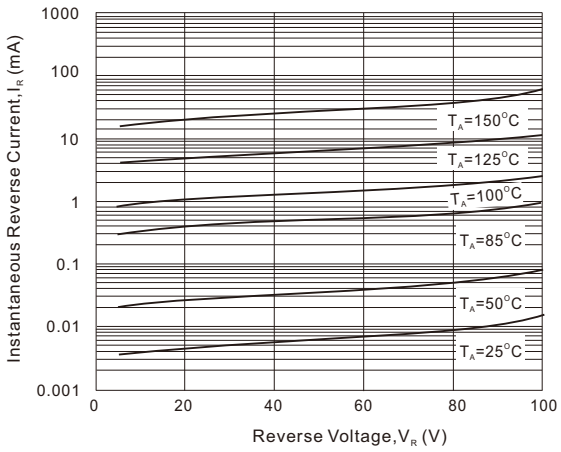

Document ID : DS-12KEI
Revised Date : 2014/07/21
Revision : C1

■ TO-277 foot print

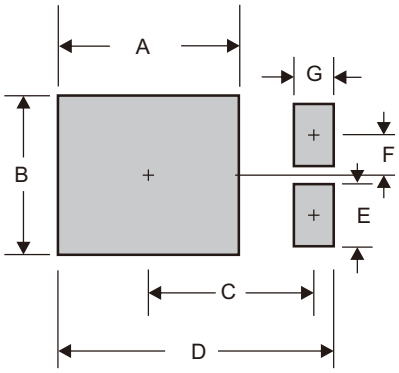

A	B	C	D	E	F	G
0.185 (4.70)	0.142 (3.60)	0.152 (3.87)	0.260 (6.60)	0.055 (1.40)	0.035 (0.90)	0.031 (0.80)

Dimensions in inches and (millimeters)

■ CITC reserves the right to make changes to this document and its products and specifications at any time without notice.

■ Customers should obtain and confirm the latest product information and specifications before final design, purchase or use.

■ CITC makes no warranty, representation or guarantee regarding the suitability of its products for any particular purpose, nor does CITC assume any liability for application assistance or customer product design.

■ CITC does not warrant or accept any liability with products which are purchased or used for any unintended or unauthorized application.

■ No license is granted by implication or otherwise under any intellectual property rights of CITC.

■ CITC products are not authorized for use as critical components in life support devices or systems without express written approval of CITC.

http://www.citcorp.com.tw/ Tel:886-3-5600628 Fax:886-3-5600636

Add:Rm. 3, 2F., No.32, Taiyuan St., Zhubei City, Hsinchu County 302, Taiwan (R.O.C.)

Document ID : DS-12KEI
Revised Date : 2014/07/21
Revision : C1